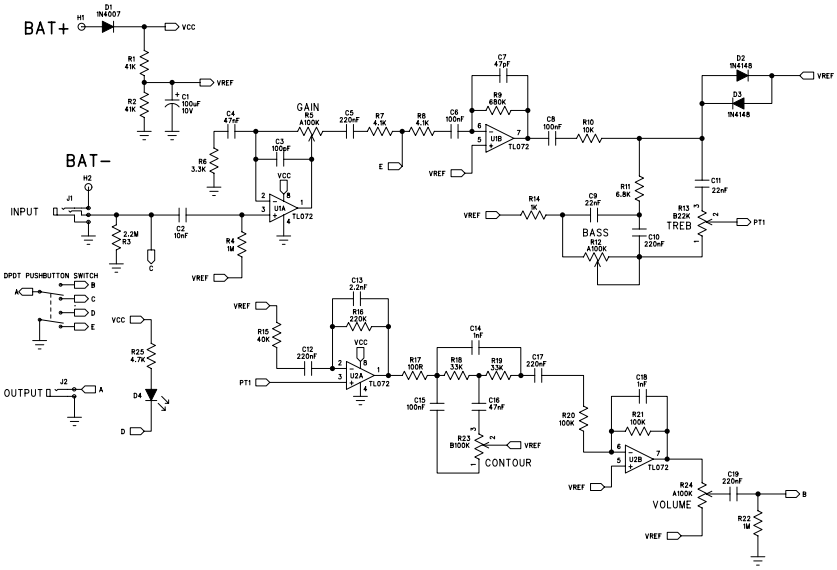

DATE Dec. 19, 1994	
DRAWING NAME	Marshall Shredmaster
SIZE	DRAWING NUMBER
	SHEET 1 OF 4